IMPERIAL®

Model Numbers

IR-10	IR-2-G48
IR-10-CC	IR-2-G48-CC
IR-10-XB	IR-2-G48-XB
IR-6-G24	IR-G60
IR-6-G24-CC	IR-G60-CC
IR-6-G24-XB	IR-G60-XB
IR-4-G36	IR-6-RG24
IR-4-G36-CC	IR-6-RG24-CC
IR-4-G36-XB	IR-6-RG24-XB

Two rings of flame for even cooking no matter the pan size.

Top grates with anti-clogging pilot shield protect the pilot from grease and debris.

Back grate hot air dam deflects heat onto the stock pot, not the backsplash.

Large 5" (127 mm) stainless steel landing ledge for convenient plating.

Durable cast aluminum with a vylox heat protection grip.

IR-6-RG24 shown with optional casters

OPEN BURNERS - PyroCentric™ 32,000 BTU (9 KW) anti-clogging burner with a 7,000 BTU/hr. (2 KW) low simmer feature. Two rings of flame for even heating.

- Cast iron PyroCentric burners are standard on all IR Series Ranges.
- Burners are anti-clogging and lift-off and separate for easy cleaning. No gaskets or screws.
- One standing pilot per burner for instant ignition.

GRATES - Front grates measure 12" x 11" (305 x 279 mm). Back grates are 12" x 13" (305 x 330 mm).

- Back grates are sized for positioning large stock pots directly over burner and feature a hot air dam.
- Pots slide easily from section to section and onto landing ledge.
- Grates are cast iron for a long service life.

GRIDDLES AND RAISED GRIDDLE BROILERS - Highly polished 3/4" (19 mm) steel plate. 21" (533 mm) plate depth. 3" (76 mm) wide grease trough.

- Burners have 20,000 (6 KW) BTU/hr. output with a heat deflector every 12" (305) for even heating.
- Large griddle grease can and full width drip tray. Both remove for easy cleaning.

STANDARD OVENS - Linear burner provides even heating throughout the 35,000 BTU (10 KW) oven.

- Unique burner baffle distributes heat flow to provide even temperatures throughout the oven cavity.
- Exclusive heat deflector reflects heat into the oven, not the floor. 100% safety pilot.
- Chef Depth interior is 26-1/2" w x 26" d x 14" h (673 x 660 x 356 mm) and accommodates 18" x 26" (457 x 660) sheet pans left-to-right and front-to-back.
- Porcelainized sides, rear, deck and door lining for easy cleaning. Heavy duty door hinge.
- Stamped inner door liner provides extra strength while optimizing heat retention.
- One chrome oven rack included.

CONVECTION OVENS - 30,000 BTU/hr. (9 KW) convection oven with 1/4 hp blower motor cooks products quickly and evenly with less shrinkage.

- Convection oven interior dimensions 26-1/2" w x 22-1/2" d x 14" h (673 x 572 x 356 mm).
- Three position switch for cooking or cool down. Fan shuts off automatically when door is open.
- Porcelainized sides, rear, deck and door lining for easy cleaning. Heavy duty door hinge.
- Three chrome oven racks included.

60" RESTAURANT RANGES

IMPERIAL®

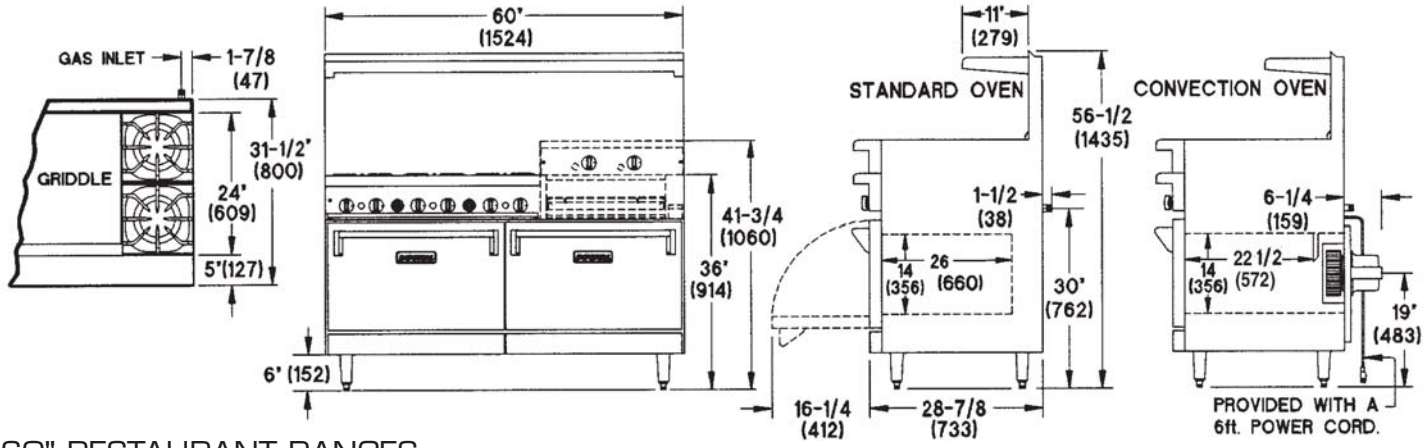

60" RESTAURANT RANGES

TOP	MODEL	GAS OUTPUT BTU	(KW)	OPEN BURNERS	GRIDDLE WIDTH	SHIP WEIGHT (KW)	LBS
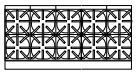	IR-10	390,000	(114)	10	N/A	(444)	980
	IR-10-CC	380,000	(111)	10	N/A	(493)	1090
	IR-10-XB	355,000	(104)	10	N/A	(425)	940
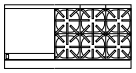	IR-6-G24	302,000	(89)	6	24" (610 mm)	(480)	1060
	IR-6-G24-CC	292,000	(86)	6	24" (610 mm)	(530)	1170
	IR-6-G24-XB	267,000	(78)	6	24" (610 mm)	(457)	1010
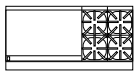	IR-4-G36	258,000	(76)	4	36" (914 mm)	(491)	1085
	IR-4-G36-CC	248,000	(73)	4	36" (914 mm)	(540)	1195
	IR-4-G36-XB	223,000	(65)	4	36" (914 mm)	(468)	1035
	IR-2-G48	214,000	(63)	2	48" (1219 mm)	(496)	1095
	IR-2-G48-CC	204,000	(60)	2	48" (1219 mm)	(540)	1195
	IR-2-G48-XB	179,000	(52)	2	48" (1219 mm)	(472)	1045
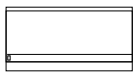	IR-G60	170,000	(50)	N/A	60" (1524 mm)	(505)	1115
	IR-G60-CC	160,000	(47)	N/A	60" (1524 mm)	(554)	1225
	IR-G60-XB	135,000	(40)	N/A	60" (1524 mm)	(481)	1065
RAISED GRIDDLE BROILER	IR-6-RG24	302,000	(89)	6	24" (610 mm)	(496)	1095
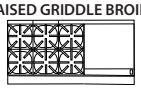	IR-6-RG24-CC	292,000	(86)	6	24" (610 mm)	(540)	1195
	IR-6-RG24-XB	267,000	(78)	6	24" (610 mm)	(468)	1035

Measurements in ( ) are metric equivalents

DIMENSIONS	CRATED DIMENSIONS
60" w x 31-1/2" d x 56-1/2" h (1524 x 800 x 1435 mm)	62-1/2" w x 39" d x 35" h (1588 x 991 x 889 mm)

MANIFOLD PRESSURE NATURAL GAS	PROPANE GAS	MANIFOLD SIZE
5.0" W.C.	10.0" W.C.	3/4" (19 mm)

Specify elevation, if over 2,000 ft.

CLEARANCE REQUIREMENTS

For use only on non-combustible floors. Legs or casters are required for non-combustible floors; or 2" (51 mm) overhang is required when curb mounted. Provide 0" clearance from non-combustible surfaces and 8" (203 mm) from combustible surfaces.

NOTES

- "CC" specifies (2) 26-1/2" (673 mm) Convection Ovens
- "XB" specifies (1) 26-1/2" (673 mm) Standard Oven and (1) Cabinet Base
- "C-XB" specifies (1) 26-1/2" (673 mm) Convection Oven and (1) Cabinet Base
- "G" specifies Griddle Top, griddle on left is standard

EXTERIOR

- Stainless steel front, sides, backguard, shelf, landing ledge and kick plate
- Welded and polished stainless steel seams
- Large 5" (127 mm) stainless steel landing ledge
- Control knobs are durable cast aluminum with a heat protection grip
- Full width, removable crumb tray under open burners for easy cleaning
- 6" (152 mm) heavy duty legs with adjustable feet
- One year parts and labor warranty

OPTIONS AND ACCESSORIES

- Reinforcement channels for mounting cheesemelter/salamander
- 6" and 11" (152 and 279 mm) stainless steel backguards
- 10" (254 mm) stainless steel wok ring
- Saute burner head, interchangeable
- Wok burner head, interchangeable
- 220V motor and transformer for convection oven
- Extra oven racks
- Thermostatic griddle control
- Grooved griddle plate
- Chrome griddle plate
- Griddle safety valve
- Gas shut off valve 3/4" (19 mm)
- Quick disconnect and flexible gas hose
- 6" (152 mm) casters

IMPERIAL®
1128 Sherborn Street Corona, CA 92879
800.343.7790 Ph: 951.281.1830 Fx: 951.281.1879
www.imperialrange.com
E-mail: imperialsales@imperialrange.com

© 2013 Imperial Commercial Cooking Equipment Printed in the U.S.A.
Imperial reserves the right to change specifications at any time without prior notice and without any obligation for past or future equipment purchases. Visit www.imperialrange.com for specification updates.