IMPERIAL®

Model Number

IFSCB150	IFSCB175
IFSCB250	IFSCB275
IFSCB350	IFSCB375
IFSCB450	IFSCB475
IFSCB550	IFSCB575
IFSCB650	IFSCB675

Add suffix "T" for Electronic Thermostat

Add suffix "C" for Computer Controls

Filter is located under fryers to save valuable space.

Filter pan is designed for maximum oil return.

5.5 GPM, 1/3 HP roller pump speeds up filtering process.

Side Car includes a stainless steel cabinet with a drain area, food warmer and dump pan.

IFSCB250 shown

FILTER PACKAGE CHOICES - Up to six fryers can be batteried into one fryer / filter system.
- Available for 50 and 75 lb. (27 and 41 Liters) oil capacity fryers.
- Available with Snap Action Thermostats, Electronic Thermostats or Computer Controls.

LOCATED UNDER FRYERS - Filter location under fryers saves valuable space.
- Internally plumbed oil drain and return line.

UNIQUE FILTER PAN DESIGN - Filter pan is designed for maximum oil return.
- Stainless steel construction is easy to clean and has a professional look.
- Positive-latching filter paper holder holds paper in place for optimal filtration.
- Quick disconnect connection offers quick and safe connection of the filtered oil back into the frypots.
- All oil drain and return lines are internally plumbed for convenience and safety.

ROLLER-PUMP - Up to six fryers can be batteried into one fryer / filter system.
- 5.5 GPM pump with a 1/3 HP motor speeds up filtering process.
- Can pump oil into a disposal vat up to 20 feet away.

DRAIN STATION - Includes a matching stainless steel cabinet with a food warmer and dump pan.
- Cabinet may be located anywhere within the fryer battery.
- Cabinet is a convenient storage area when located at the end of the battery.

EXTERIOR FEATURES - Continuous cabinet provides a professional look.
- 5" (127 mm) deep continuous stainless steel front landing ledge.
- Stainless steel precision welded frypot.
- Includes casters, joiner strips and filter starter kit.
- Rear gas manifold with one point gas connection.

TUBE FIRED FRYER/FILTERS
SIDE CAR FILTER SYSTEMS

IMPERIAL®

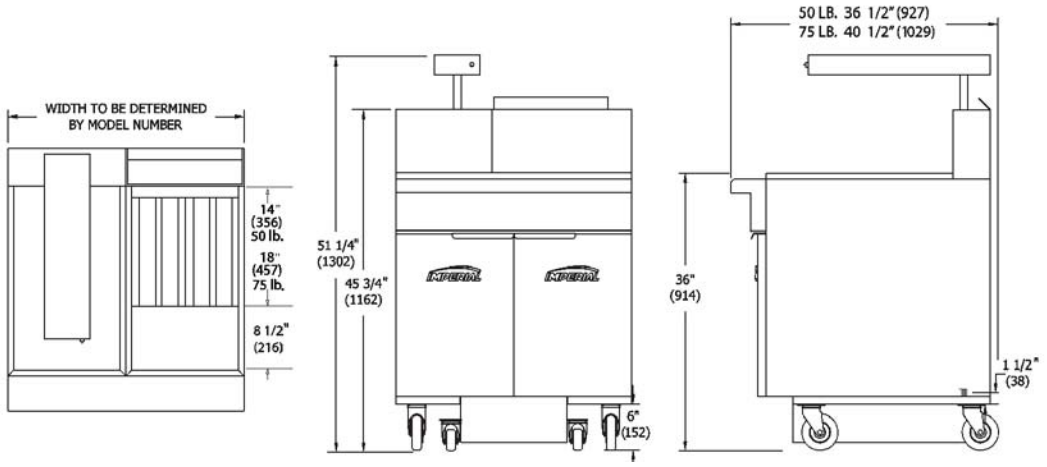

MODEL	FRYER OIL CAPACITY	OVERALL WIDTH	NUMBER OF FRYERS	SHIP WEIGHT (KG)	LBS
IFSCB150	50 lbs. (41 L)	31" (787 mm)	1	(196)	433
IFSCB250	50 lbs. (41 L)	46-1/2" (1181 mm)	2	(311)	686
IFSCB350	50 lbs. (41 L)	62" (1575 mm)	3	(426)	939
IFSCB450	50 lbs. (41 L)	77-1/2" (1969 mm)	4	(541)	1192
IFSCB550	50 lbs. (41 L)	93" (2362 mm)	5	(655)	1445
IFSCB650	50 lbs. (41 L)	108-1/2" (2756 mm)	6	(770)	1698
IFSCB175	75 lbs. (51 L)	39" (911 mm)	1	(204)	450
IFSCB275	75 lbs. (51 L)	58-1/2" (1486 mm)	2	(327)	720
IFSCB375	75 lbs. (51 L)	78" (1981 mm)	3	(449)	990
IFSCB475	75 lbs. (51 L)	97-1/2" (2477 mm)	4	(572)	1260
IFSCB575	75 lbs. (51 L)	117" (2972 mm)	5	(694)	1530
IFSCB675	75 lbs. (51 L)	136-1/2" (3467 mm)	6	(816)	1800

Measurements in ( ) are metric equivalents.

MODEL	DIMENSIONS	CRATED DIMENSIONS
IFSCB150	31" w x 36-1/2" d x 45-3/4" h (787 x 927 x 1162 mm)	32-1/2" w x 39" d x 49-1/2" h (826 x 991 x 1257 mm)
IFSCB250	46-1/2" w x 36-1/2" d x 45-3/4" h (1181 x 927 x 1162 mm)	48" w x 39" d x 49-1/2" h (1219 x 991 x 1257 mm)
IFSCB350	62" w x 36-1/2" d x 45-3/4" h (1575 x 927 x 1162 mm)	63-1/2" w x 39" d x 49-1/2" h (1613 x 991 x 1257 mm)
IFSCB450	77-1/2" w x 36-1/2" d x 45-3/4" h (1969 x 927 x 1162 mm)	79" w x 39" d x 49-1/2" h (2007 x 991 x 1257 mm)
IFSCB550	93" w x 36-1/2" d x 45-3/4" h (2362 x 927 x 1162 mm)	94-1/2" w x 39" d x 49-1/2" h (2400 x 991 x 1257 mm)
IFSCB650	108-1/2" w x 36-1/2" d x 45-3/4" h (2756 x 927 x 1162 mm)	110" w x 39" d x 49-1/2" h (2794 x 991 x 1257 mm)
IFSCB175	39" w x 40-1/2" d x 45-3/4" h (911 x 1029 x 1162 mm)	40-1/2" w x 43" d x 49-1/2" h (1029 x 1092 x 1257 mm)
IFSCB275	58-1/2" w x 40-1/2" d x 45-3/4" h (1486 x 1029 x 1162 mm)	60" w x 43" d x 49-1/2" h (1524 x 1092 x 1257 mm)
IFSCB375	78" w x 40-1/2" d x 45-3/4" h (1981 x 1029 x 1162 mm)	79-1/2" w x 43" d x 49-1/2" h (2019 x 1092 x 1257 mm)
IFSCB475	97-1/2" w x 40-1/2" d x 45-3/4" h (2477 x 1029 x 1162 mm)	99" w x 43" d x 49-1/2" h (2515 x 1092 x 1257 mm)
IFSCB575	117" w x 40-1/2" d x 45-3/4" h (2972 x 1029 x 1162 mm)	118-1/2" w x 43" d x 49-1/2" h (3010 x 1092 x 1257 mm)
IFSCB675	136-1/2" w x 40-1/2"d x 45-3/4" h (3467 x 1029 x 1162 mm)	138" w x 43" d x 49-1/2" h (3505 x 1092 x 1257 mm

FILTER ELECTRICAL REQUIREMENT

VOLTS	PHASE	HERTZ	AMPS
115 V	1	60	6.8 amps

6ft. (1829 mm) power cord with 3 prong plug provided

CLEARANCE REQUIREMENTS

For use only on non-combustible floors. Legs or casters are required for non-combustible floors. Provide 0" clearance from non-combustible surfaces and 6" (152 mm) from combustible surfaces.

OPTIONS AND ACCESSORIES

- Automatic basket lifts with computerized controls
- Manual controlled basket lifts
- Gas shut-off valve, 3/4" N.P.T.
- Stainless steel tank cover
- Stainless steel side drain shelf
- Stainless steel side splash
- Manual timer
- Filter paper 40# thickness, 20 microns, 100 sheets per box

IMPERIAL®
1128 Sherborn Street Corona, CA 92879
800.343.7790 Ph: 951.281.1830 Fx: 951.281.1879
www.imperialrange.com
E-mail: imperialsales@imperialrange.com

© 2013 Imperial Commercial Cooking Equipment Printed in the U.S.A.
Imperial reserves the right to change specifications at any time without prior notice and without any obligation for past or future equipment purchases. Visit www.imperialrange.com for specification updates.