Howard-McCray

Product Specifications Sheets

34N Series Double Duty Deli

Model No.	Description	Length	Depth	Height	Voltage	Amps	HP/BTUs	Power Cord	Est. Ship Weight
SC-CDS34N-4-LED	Self Contained	48"	36.25"**	55"	115	12.0	1/4	5-15P	530
SC-CDS34N-6-LED	Self Contained	72"	34.25"	55"	115	12.0	1/3	5-15P	741
SC-CDS34N-8-LED	Self Contained	96"	34.25"	55"	115	16.0	1/2	5-20P	897
SC-CDS34N-10-LED	Self Contained	120"	34.25"	55"	115	13.8	1/2	NO	1150
SC-CDS34N-12-LED	Self Contained	144"	34.25"	55"	115	17.4	3/4	NO	1414
R-CDS34N-4-LED	Remote	48"	34.25"	55"	115	0.8	1400	NO	497
R-CDS34N-6-LED	Remote	72"	34.25"	55"	115	1.3	2100	NO	693
R-CDS34N-8-LED	Remote	96"	34.25"	55"	115	1.6	2800	NO	832
R-CDS34N-10-LED	Remote	120"	34.25"	55"	115	2.4	3500	NO	1089
R-CDS34N-12-LED	Remote	144"	34.25"	55"	115	2.4	4200	NO	1359

MODEL NUMBER PREFIX - SC = Self Contained R = Remote
MODEL NUMBER SUFFIX - W = White B = Black S = Stainless Steel LED = LED lighting

- Cases are designed to operate at 75 degrees Fahrenheit and 55% relative humidity
- Cases are equipped with drains; check your local building codes for connection requirements.
- Specification subject to change without notice

IF COLORS ARE MIXED AN ADDITIONAL CHARGE WILL APPLY

REVIT KCL ENGINEERING c UL us LISTED ANSI/NSF 7 SANITATION NSF/ANSI 7 647N

Howard-McCray A Division of HMC Enterprises LLC • 831 East Cayuga St • Philadelphia, PA 19124 USA
(215) 464-6800 • 1-800-344-8222 • Fax (215) 969-4890 • E-Mail: sales@howardmccray.com • www.howardmccray.com

Howard-McCray

34N Series Double Duty Deli

Standard Specifications and Optional Features

CONSTRUCTION
- UL Classified to ANSI/NSF 7
- Foamed in place CFC free foam
- Thermal insulated front glass 28"H
- Heavy gauge steel super structure
- Bottom storage
- Drain is included for cleaning

INTERIOR
- White, black or stainless steel ends
- Stainless steel heavy gauge mezzanine shelf
- White aluminum floor (bottom storage area)
- Air insulated baffle (prevents moisture from dripping into display area)

EXTERIOR
- Double pane rear removable doors
- Newly designed rear compression door jamb
- Removable front grille allows for cleaning
- Removable rear grille for easy servicing
- GFI protected outlet mounted rear
- Removable rear top glass doors
- Removable rear bottom doors
- Rear exterior mounted switch
- Rear mounted electronic control (thermostat)
- 1" Front Bumper

FINISHES
- Thermal formed doors and door tracks
- White, black or stainless steel front and ends
- Stainless steel mirror trim
- Stainless steel heavy gauge top - 23.3" W
- White, black or stainless steel exterior rear

LIGHTING
- LED lighting
- 2 rows of lighting at top of unit

ELECTRICAL REQUIREMENTS
- 115V 4', 6' & 8' with power cord
- UL/CUL listed
- 115V-15AMP general purpose receptacle (wired separately) 10' & 12' only

REFRIGERATION
- CopeVap system (eliminates need for condensate pan)
- R513A expansion valve system
- Full length gravity coil located at inside top of unit and in bottom day storage area
- Self contained unit
- Automatic defrost electronically controlled
- Remotes available

OPTIONS
- Scale stand 8'
- Paper cutter 8'
- Stainless steel, laminate, or paint
- Mirrored doors
- Extra stainless steel mezzanine shelf
- Drop work shelf
- 2" Front Bumper
- Door locks
- Digital thermometer
- Coated coils
- LED lighting at top of unit
- Lit shelves up to two (2) rows

Important Note:
All refrigerated cases are designed to operate in an environment of 75 degrees and 55% relative humidity.
Product must be cooled before being displayed within the case.
DRAIN IS REQUIRED FOR CLEANING

A Division of HMC Enterprises LLC • 831 East Cayuga St • Philadelphia, PA 19124 USA
(215) 464-6800 • 1-800-344-8222 • Fax (215) 969-4890 • E-Mail: sales@howardmccray.com • www.howardmccray.com

c UL us LISTED
CLASSIFIED UL EPH ANSI/NSF 7
SANITATION CLASSIFIED UL NSF/ANSI 7 647N

Howard-McCray

34N Series Double Duty Deli

Technical Data / Stand Alone Design

Model No.	SC R	SC-CDS34N-4-LED R-CDS34N-4-LED	SC-CDS34N-6-LED R-CDS34N-6-LED	SC-CDS34N-8-LED R-CDS34N-8-LED	SC-CDS34N-10-LED R-CDS34N-10-LED	SC-CDS34N-12-LED RCDS34N-12-LED
Length		48″	72″	96″	120″	144″
Height		55″	55″	55″	55″	55″
Depth		34.25″	34.25″	34.25″	34.25″	34.25″
Depth with bottom door	SC	35.75″	34.25″	34.25″	34.25	34.25
(Dimensions are +/- 1/4") **Operating temperature**		36°F to 40°F	36°F to 40°F	36°F to 40°F	36°F to 40°F	36°F to 40°F
Refrigerant (exp. valve)	SC	R513A	R513A	R513A	R513A	R513A
Compressor size HP	SC	1/4	1/3	1/2	1/2	3/4
Defrost per day (24 hours)		Electronic controlled 1 per day	Electronic controlled 1 per day	Electronic controlled 1 per day	Electronic controlled 1 per day	Electronic controlled 1 per day
BTU's at +20°F Evap. Temp.	R	1400	2100	2800	3500	4200
Voltage		115	115	115	115	115
Amperage unit only		12.0	12.0	16.0	13.8	17.4
Cord and plug		Yes	Yes	Yes	No	No
Exterior color		White/Black	White/Black	White/Black	White/Black	White/Black
Interior color		White	White	White	White	White
Inside end panels		White	White	White	White	White
Floors		White	White	White	White	White
# of top doors		2	2	4	4	4
Door size		23.56″ x 18.56″	23.56″ x 29.3″	23.56″ x 19.56	23.56″ x 29.3″	23.56″ x 19.56
# of bottom doors	SC	1 external	2 sliding	2 sliding	2 sliding	2 sliding
Bottom door size		14″ x 18.56″	14″ x 19.56″	14″ x 40.3″	14″ x 29.3″	14″ x 23.8″
# of coils		2	2	2	2	2
Bottom storage		Yes	Yes	Yes	Yes	Yes
Front glass		28″ x 43.0″	28″ x 67.0″	28″ x 91.0″	28″ x 115″	28″ x139
# of main deck shelves		2	3	4	5	6
Main deck size		**(1)**30″X18″ **(1)** 30″ x 23.875″	**(1)**30″X18″ **(2)** 30″ x 23.875″	**(1)**30″X18″ **(3)** 30″ x 23.875″	**(1)**30″X18″ **(4)** 30″ x 23.875″	**(1)**30″X18″ **(5)** 30″ x 23.875″
Floor Racks		**(1)** 23.625″ x22″	**(2)** 23.625″ x22″	**(3)** 23.625″ x22″	**(4)** 23.625″ x22″	**(5)** 23.625″ x22″
Cubic capacity		25.30	40.0	55.9	72.8	87.8
Mezzanine shelf		Standard	Standard	Standard	Standard	Standard
Shipping Info						
Height		61″	61″	61″	61″	61″
Depth		44″	44″	44″	44″	44″
Length		61″	87″	109″		
Gross weight SC/R		530/497	741/693	897/832	1150/1089	1414/1359

A Division of HMC Enterprises LLC • 831 East Cayuga St • Philadelphia, PA 19124 USA
(215) 464-6800 • 1-800-344-8222 • Fax (215) 969-4890 • E-Mail: sales@howardmccray.com • www.howardmccray.com

c UL us LISTED
CLASSIFIED UL EPH ANSI/NSF 7
SANITATION CLASSIFIED UL NSF/ANSI 7 647N

Howard-McCray

34N Series Double Duty Deli

Technical Data • Side View • Plan View

4' Side View

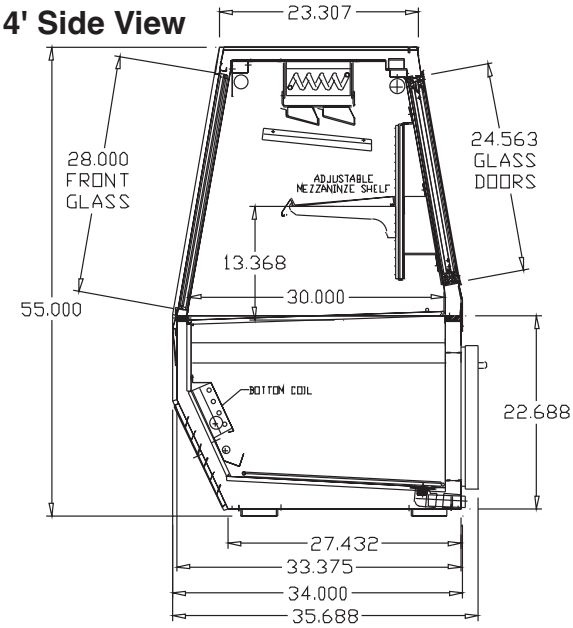

6' - 8' Side View

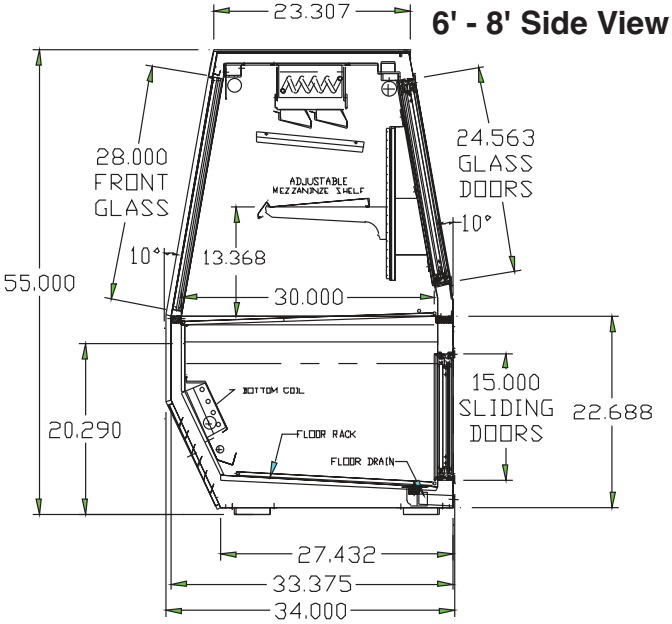

Plan View

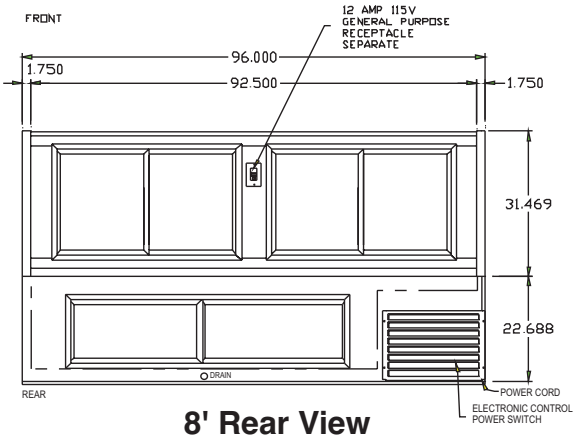

8' Rear View

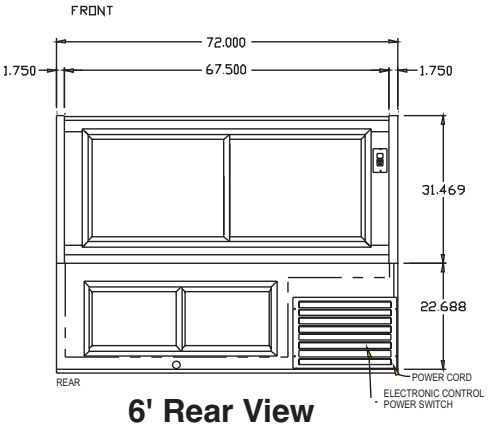

6' Rear View

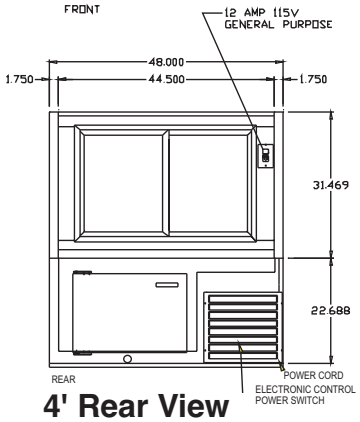

4' Rear View

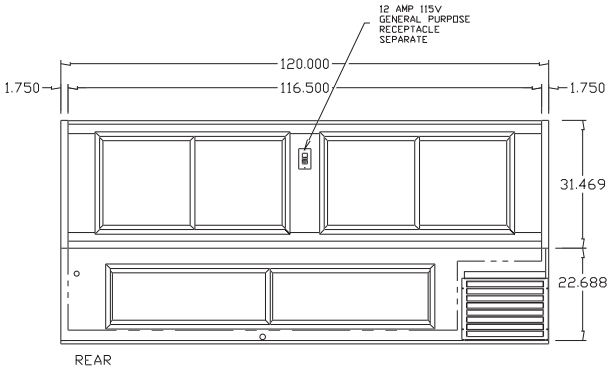

10' Rear View

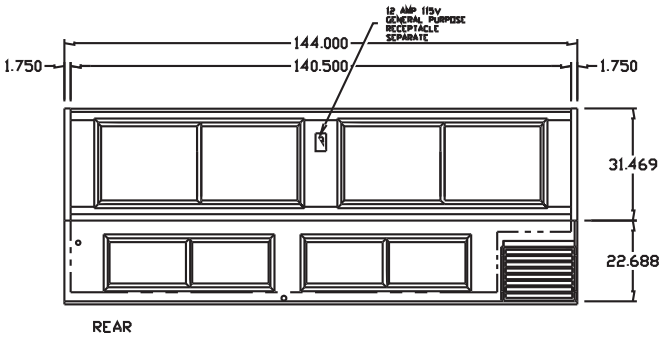

12' Rear View

A Division of HMC Enterprises LLC • 831 East Cayuga St • Philadelphia, PA 19124 USA
(215) 464-6800 • 1-800-344-8222 • Fax (215) 969-4890 • E-Mail: sales@howardmccray.com • www.howardmccray.com

c UL us LISTED

ANSI/NSF 7

SANITATION NSF/ANSI 7 647N