GARLAND

Master Series Heavy Duty Front-Fired Hot Top Range

Project _____

Item _____

Quantity _____

CSI Section 11400

Approved _____

Date _____

Models

- M45R
- M45S
- M45T

Model M45R
Two Front-Fired
Hot Top Range

Standard Features

- Stainless steel front and sides
- 6" (152mm) chrome steel adj. legs
- 7-1/2" (191mm) stainless steel front rail
- Two 17" (432mm) extra-heavy cast iron top sections, each with 3 individually controlled jet burners rated 45,000 BTU (13.16 kW) natural or 33,000 BTU (9.66 kW) propane total each section
- Removable cast iron ring and lid
- Heavy gauge, aluminized steel radiation baffle system
- 1-piece Stainless Steel drip tray
- Piezo spark ignition for oven
- Fully porcelainized oven interior
- 40,000 BTU (11.72 kW) natural gas, 35,000 BTU (10.25 kW) propane gas, cast iron oven burner
- Storage base interior of aluminized steel w/shelf (suffix S)
- Modular top available (suffix T)

Options & Accessories

- Stainless steel oven interior
- Stainless steel common front rail up to 102" (2591mm) wide (two or more units in a battery)
- Stainless steel main back
- Convection oven base, add C to Model No., e.g., M45RC
- Additional oven racks
- Rear gas connection, 3/4" or 1-1/4" NPT; exterior mount, left or right, add 5-1/4"(133mm) to range width
- Gas regulator 3/4" or 1-1/4"
- Gas shut off valve; 3/4", 1" or 1-1/4" NPT
- Gas flex hose & quick disconnect (3/4", 1" or 1-1/4" NPT x 5') w/ restraining device, please specify
- End caps and cover, (NC, specify)
- Set of (4) Polyurethane non-marking swivel casters w/front brakes
- 6" (152mm) stainless steel adj. legs
- Dais base (not for use with "RC" oven)
- Storage base shelf of stainless steel
- Stainless steel tubular high shelf, single or double deck
- Stainless steel backguard: 10" (354mm), 17" (432mm) or 33" (838mm)
- 230 volt, 50 cycle components, RC motor (export)
- Celsius dial for oven thermostat (NC)

Specifications

Heavy-duty gas range with oven, Model M45R. Two (2) 17" (432mm) front fired spectro-heat hot tops, total 90,000 BTU (26.37 kW) natual gas. 34" (864mm) wide x 38" (965mm) deep, including 7-1/2" (191mm) deep stainless steel front rail. Porcelain enamel oven with 40,000 BTU (11.72 kW), natural gas, cast iron burner. Stainless steel front and sides. 130,000 BTU (38.09 kW) total. Natural or propane gas available Also available with storage base w/ doors, suffix S, and modular top, suffix T.

NOTE: Ranges suppled with casters must be installed with an approved restraining device.

Master Series Heavy Duty Front-Fired Hot Top Range

Garland Commercial Ranges Ltd.
1177 Kamato Road,
Mississauga, Ontario
L4W 1X4 CANADA

General Inquires 1-905-624-0260
USA Sales, Parts and Service 1-800-424-2411
Canadian Sales 1-888-442-7526
Canada or USA Parts/Service 1-800-427-6668

www.garland-group.com
6907
12/18

WELBILT

GARLAND

Master Series Heavy Duty Front-Fired Hot Top Range

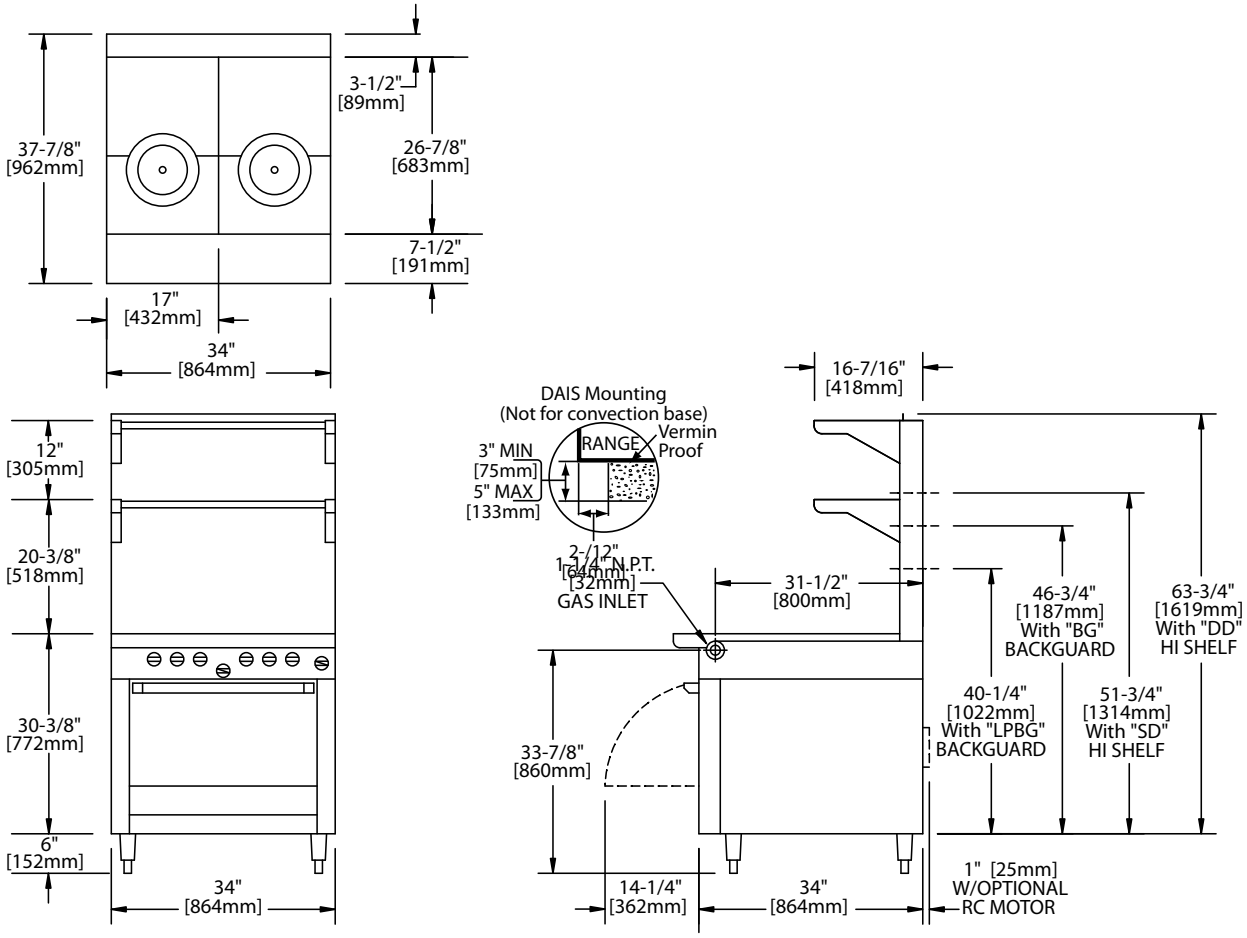

Product	Width: In(mm)	Depth: In(mm)	Height: In(mm) (w/ NSF Legs)	Height: In(mm) (w/o NSF Legs)	Oven/Storage Base Interior: in(mm)		
					Width	Depth	Height
M45R	34(864)	38(965)	36-3/8(924)	30-3/8(772)	26-1/4(667)	29(737)**	13-1/2(343)
M45S	34(864)	38(965)	36-3/8(924)	36-3/8(924)	26(665)	30-1/2(773)	20-1/2(519)
M45T	34(864)	38(965)	36-3/8(924) w/stand	9-1/2 (241) w/o stand*	N/A	N/A	N/A

*Modular top has 1-1/2" seating flanges. **RC oven is 25" (635mm) deep.

INPUT-BTU/hr	M45R & M45RC		M45S & M45T	
	Natural	Propane	Natural	Propane
Total Top Section	90,000 (26.37kW)	66,000 (19.33kW)	90,000 (26.37kW)	66,000 (19.33kW)
Oven	40,000 (11.72kW)	35,000 (10.25kW)	N/A	N/A
TOTAL	130,000(38,37kW)	101,000 (29.58kW)	90,000(37.217kW)	66,000(19.33kW)

RC=Range w/Convection Oven R=Range w/Oven S=Range w/Storage Base T=Modular Top

INSTALLATION NOTES			Shipping Wt: (Lb/Kg)[2]
Combustible Wall Clearances [1]	Entry Clearances	Operating Pressure	M45R 510/232
Sides: 14" (356mm) Back: 6" (152mm)	Crated: 39-1/4" (997mm) Uncrated: 34-1/4" (870mm)	Natural: 6" WC (15mbar) Propane: 10" WC (25mbar)	M45S 410/186 M45T 305/138

[1]NOTE: Installation clearance reductions are applicable only where local codes permit.

[2]Shipping Cubic Feet 50 for R & S Models, 20 for T models

Data applies only to North America

Gas input ratings shown here are for installations up to 2,000 ft. (610m) above sea level. Specify altitudes over 2,000 ft.
Electrical characteristics each RC oven: 1/3 HP motor, 120 VAC, single phase, 3.4 amps, 6 ft. (1.8m) power cord with NEMA 5-15P plug provided.
230 VAC export is direct connect, single phase, 50 Hz. Please specify gas type when ordering.

Welbilt reserves the right to make changes to the design or specifications without prior notice.

Garland Commercial Ranges Ltd.
1177 Kamato Road,
Mississauga, Ontario
L4W 1X4 CANADA

General Inquires 1-905-624-0260
USA Sales, Parts and Service 1-800-424-2411
Canadian Sales 1-888-442-7526
Canada or USA Parts/Service 1-800-427-6668

www.garland-group.com

6907
12/18

WELBILT