APPLICATION:

JOB NAME:

QUANTITY:

ITEM NO.:

PRODUCT NAME:

SS 3/4 FAUCET 8DLH 10CS10DJ

MODEL:

☐ 60186 SS 3/4 FAUCET 8DLH 10CS10DJ

OPTIONS OR MODIFICATIONS:

☐ OTHER _____

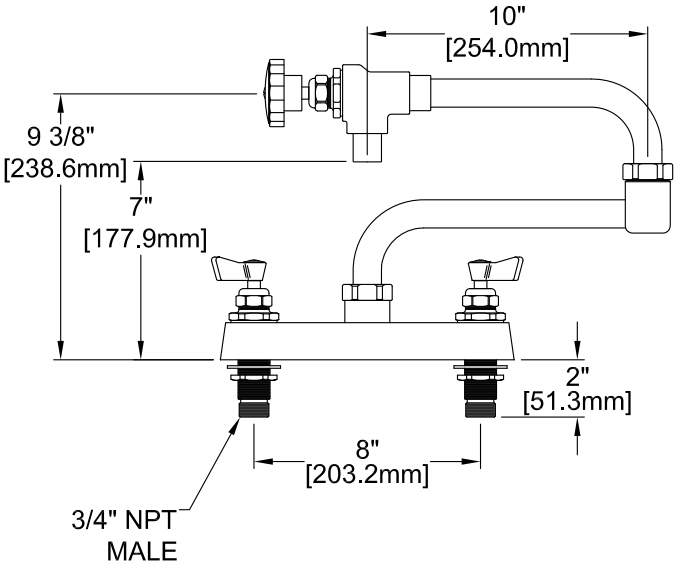

FEATURES:

* 8" DECK MOUNT FAUCET
* SWIVELING SEAT DISKS
* HOT SIDE STEM - RIGHT HAND
* COLD SIDE STEM - LEFT HAND
* STAINLESS STEEL SEATS
* STAINLESS STEEL SEAT SCREWS
* STAINLESS STEEL HANDLE SCREWS

SYSTEM LIMITS

* TEMP: 40°F MIN. TO 160°F MAX.
* PRESSURE 200 PSI MAX. STATIC
* 29 GPM AT 80 PSI

SHIPPING WEIGHT

* 10.00 LBS

PRODUCT COMPLIANCE:

* ASME A112.18.1 / CSA B125.1
* NSF 61 - Section 9
* NSF 372 (Low Lead Content)

FOOTPRINT:

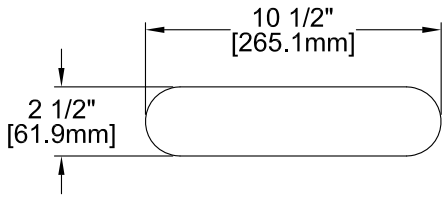

ROUGH-IN:

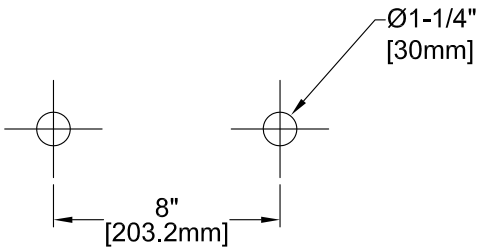

FISHER MANUFACTURING COMPANY
TOLL FREE: 800-421-6162 - FAX: 800-832-8238
information@fisher-mfg.com - www.fisher-mfg.com

SPEC. FATS-PFDJ-8DLL