APPLICATION:

JOB NAME:

QUANTITY:

ITEM NO.

PRODUCT NAME:

PRE-RINSE SPRING STYLE WALL MOUNT WITH WALL BRACKET & ADD-ON FAUCET

SPECIAL CONFIGURATION
☐ _____ CHECK BASE MODEL AND OPTIONS

MODEL:

- ☐ 34355 WITH 6" SWING SPOUT
- ☐ 34363 WITH 8" SWING SPOUT
- ☐ 34371 WITH 10" SWING SPOUT
- ☐ 34398 WITH 12" SWING SPOUT
- ☐ 34401 WITH 14" SWING SPOUT
- ☐ 34428 WITH 16" SWING SPOUT

OPTIONS OR MODIFICATIONS:

- ☐ SUPPLY LINES (24" OR 36") CIRCLE LENGTH
- ☐ BACKFLOW PREVENTER
- ☐ BRUSH
- ☐ VANDAL RESISTANT KIT
- ☐ HANDLES (CROSS OR WRIST) CIRCLE STYLE
- ☐ OTHER _____

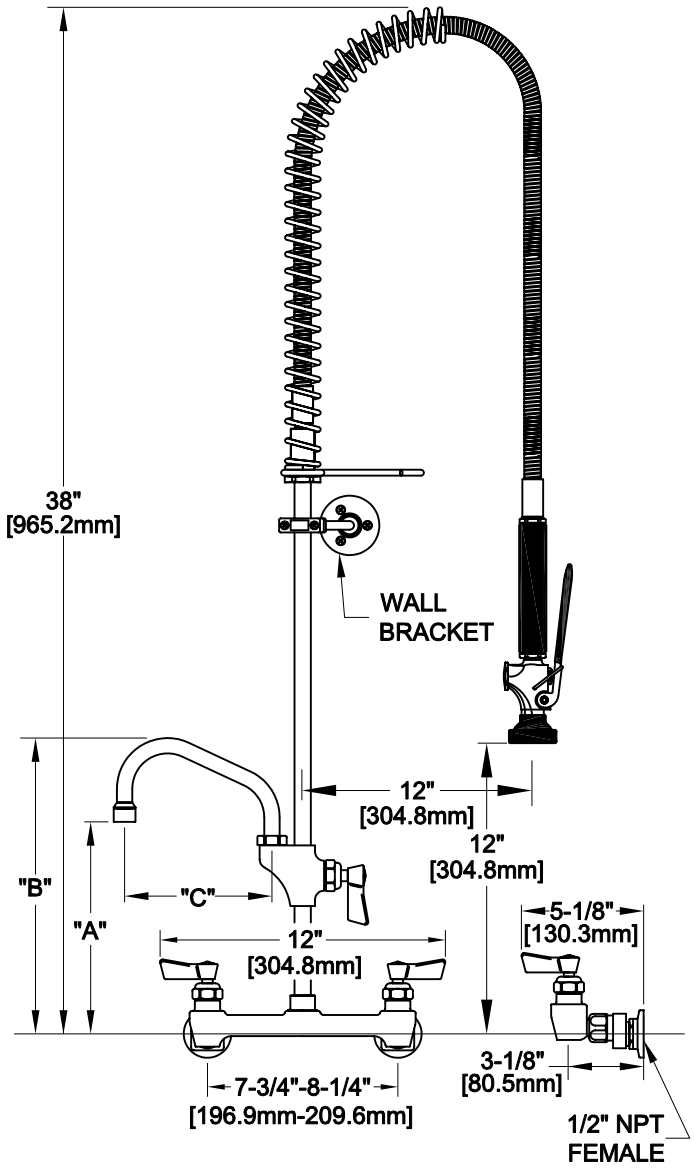


| ROUGH-IN | MODEL | DIM "A" | DIM "B" | DIM "C" |
|---|---|---|---|---|
| 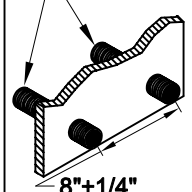 1/2" NPT MALE* 8"±1/4" [203.2±6.4mm] *NIPPLES NOT INCLUDED | 34355 | 8-3/4" [221.3mm] | 12-3/8" [313.3mm] | 6" [152.4mm] |
| | 34363 | 9" [227.6mm] | 12-7/8" [326.0mm] | 8" [203.2mm] |
| | 34371 | 9-5/8" [243.5mm] | 13-3/8"' [340.3mm] | 10" [254.0mm] |
| | 34398 | 10-1/4" [259.4mm] | 13-7/8" [351.4mm] | 12" [304.8mm] |
| | 34401 | 10-5/8" [275.0mm] | 14-3/4" [373.7mm] | 14" [355.6mm] |
| | 34428 | 11-1/2" [292.1mm] | 15-3/8" [389.5mm] | 16" [406.4mm] |

FEATURES:

MAIN CONTROL VALVE
* WALL MOUNT
* ECCENTRICS ADJUST FROM 7-1/2" TO 8-1/2"
* INTERNAL SPRING LOADED CHECK VALVES
* SWIVELLING SEAT DISKS
* HOT SIDE STEM - RIGHT HAND CHECK
* COLD SIDE STEM - LEFT HAND CHECK
* STAINLESS STEEL SEATS, SEAT SCREWS AND HANDLE SCREWS

ADD-ON CONTROL VALVE
* STEM - RIGHT HAND SWIVEL
* HOT INDEX BUTTON
* SWIVELLING SEAT DISKS
* STAINLESS STEEL SEATS, SEAT SCREWS AND HANDLE SCREWS.

HOSE
* 36" LENGTH
* STAINLESS STEEL END FITTINGS
* STAINLESS STEEL EXTERNAL JACKET
* 3-PLY FIBER REINFORCED INTERNAL RUBBER HOSE
* REPAIRABLE IN FIELD WITH SIMPLE TOOLS

ULTRA SPRAY VALVE
* LOWEST ENERGY USER - 1.15 GPM @ 60 PSI
* CLEANS FASTER - TEST PROVEN
* ENGINEERED TO LAST - NO 'O' RINGS TO LEAK
* INTERCHANGEABLE - FITS ALL BRANDS

WALL BRACKET
* ADJUSTS FROM 2" TO 12"

SYSTEM LIMITS
* TEMP: 40°F MIN. TO 140°F MAX. STATIC
* PRESSURE 200 PSI MAX. STATIC
* SHIPPING WEIGHT: 15.0 LBS

EPAct 2005 Compliant

ANSI/A112.18.1M

FISHER
FISHER MANUFACTURING COMPANY
TOLL FREE: 800-421-6162 - FAX: 800-832-8238
information@fisher-mfg.com - www.fisher-mfg.com

SPEC. 34355 REV. B